大葉大學九十八學年度研究所碩士班招生考試試題紙					
系所別	組別	考試科目（中文名稱）	考試日期	節次	備註
機械與自動化工程學系碩士班	乙、丙	自動控制 或 應用力學	4 月 12 日	第二節 10:40～12:10	1. 共三頁。可使用不可程式計算機 2. 應用力學或自動控制各佔五題，考生任選五題作答。

1.

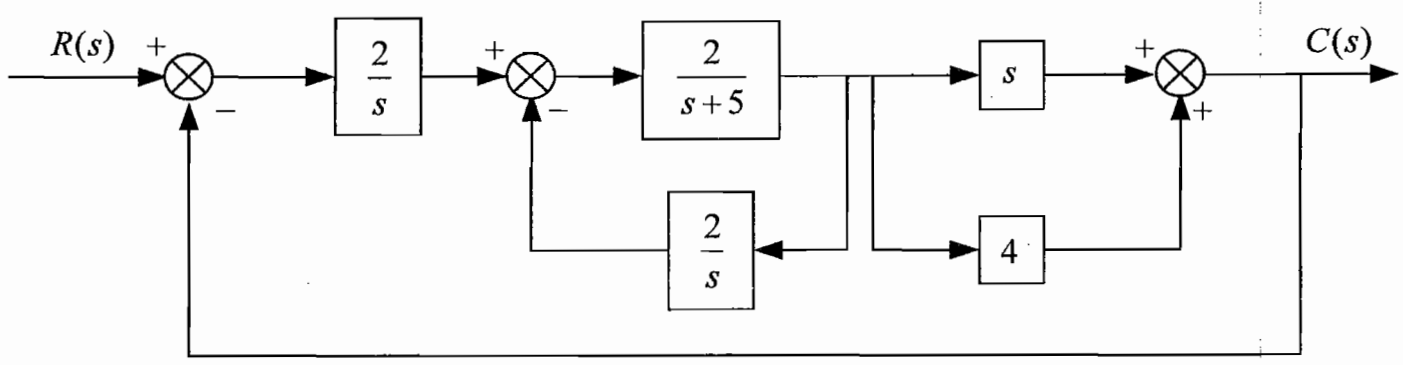

(a) For the above system, find the transfer function $T(s)=\dfrac{C(s)}{R(s)}$ (10%)

(b) If the input $R(s)=\dfrac{1}{s}$, obtain the system time response $c(t)$. (10%)

2. For the system with the closed-loop transfer function as

$$\frac{Y(s)}{R(s)}=\frac{1}{s^3+5s^2+6s+K}.$$

Plot the root locus as parameter K varies. List all your procedures. (20%)

3. For the system :

$$\frac{Y(s)}{R(s)}=\frac{(s+2)}{s^3+2s^2+s+K}$$

(a) By Routh-Hurwitz criterion, find the range of K for which the system is stable. (10%)

(b) When the input $R(s)=\dfrac{1}{s}$, determine the steady-state error $e_{ss}=\lim\limits_{t\to\infty}e(t)$. (10%)

(Note: e(t)=r(t)-y(t)).

4. For each of the unit step response shown below, find the parameters in the transfer function of each system

(a) $G(s)=\dfrac{k}{s+a}$ (10%)

(b) $G(s)=\dfrac{k}{s^2+2\zeta\omega_n s+\omega_n^2}$ (10%)

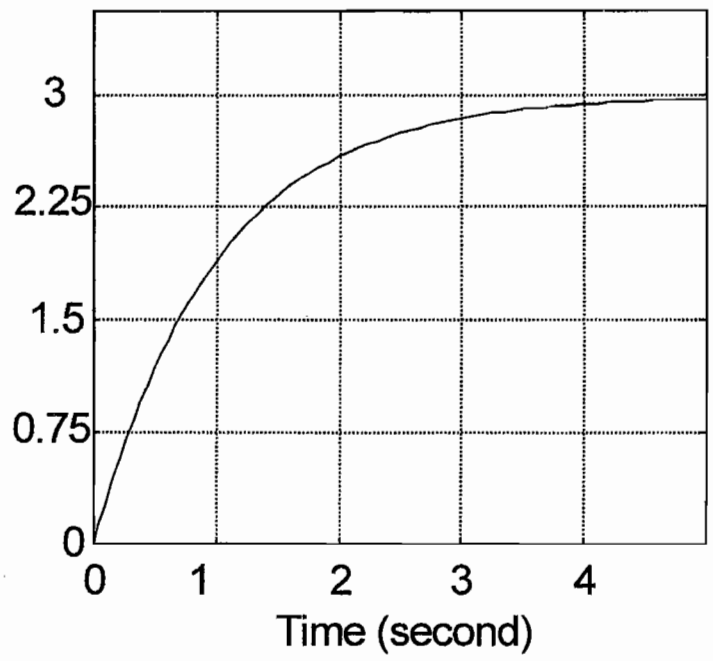

(a)

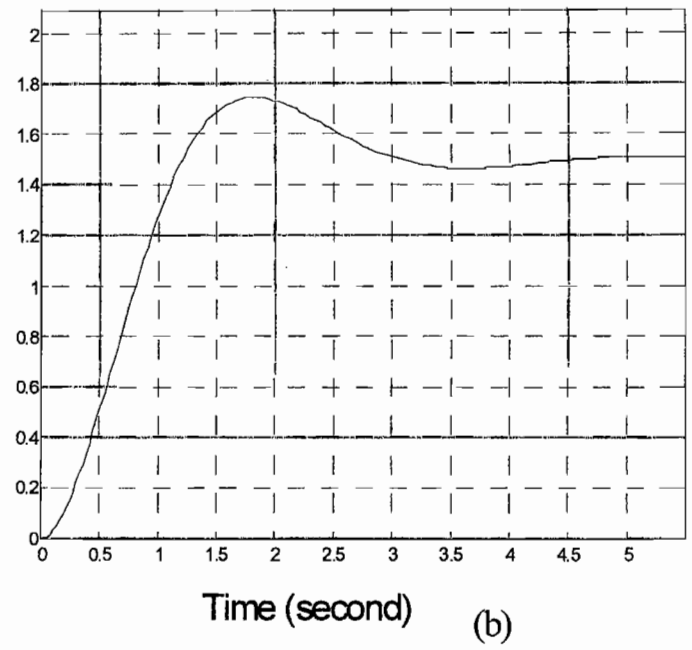

(b)

5. If the Bode plot of $G(s)=\dfrac{K}{s(\tau s+1)}$ is plotted as following,

a. Find the value of K and τ from the plot. (15%)

b. What is the bandwidth of this system. (5%)

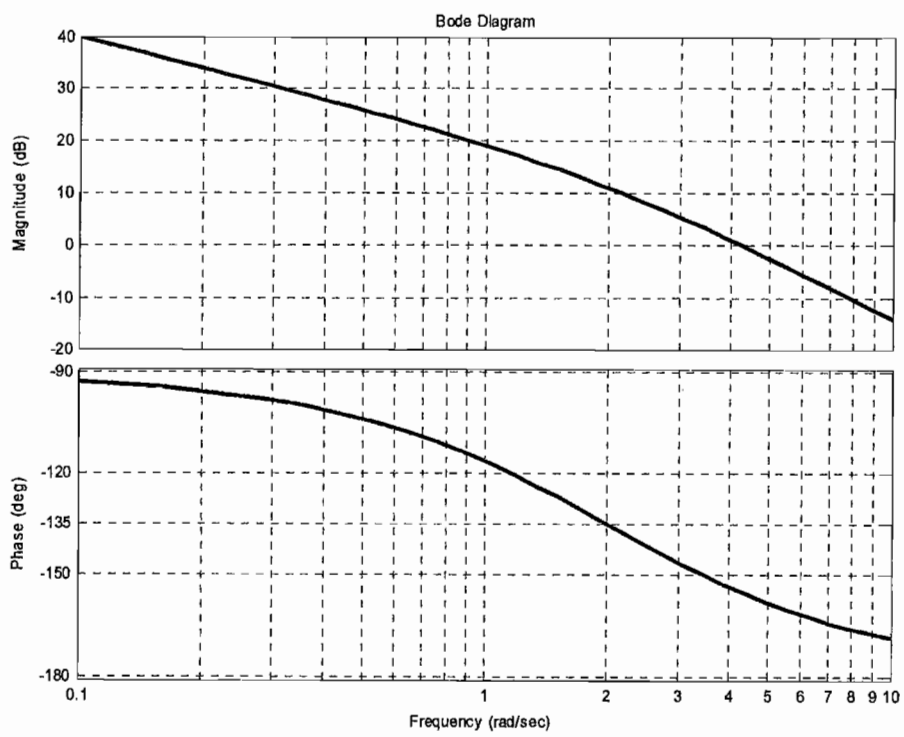

6. As shown in Figure 1, the man pulls on the cord with a force of 350 N. Represent this force, acting on the support A, as a Cartesian vector and determine its direction. (20 %)

7. As shown in Figure 2, the thin rod of weight W rests against the smooth wall and floor. Determine the magnitude of force P needed to hold it in equilibrium. (20 %)

8. As shown in Figure 3, m_A=100 Kg, m_B=150 Kg. Determine the accelerations of block A for both cases. (20 %)

9. As in Figure 4, the ball has a mass of 1.0 kg and a speed $v = 10$ m/s at the instant it is at its lowest point A ($\theta = 0^\circ$). Determine the tension in the cord and the speed at the instant $\theta = 90^\circ$. (20 %)

10. As in Figure 5, A=60 Kg, B=20 Kg, $\mu = 0.1$, released from rest. Find the acceleration of block A. (20 %)

Figure 1

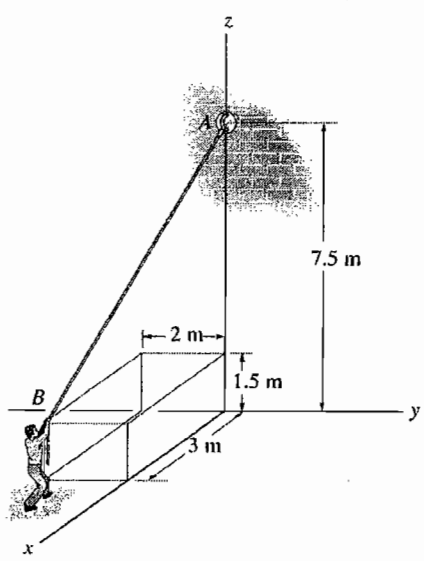

(a)

Figure 2

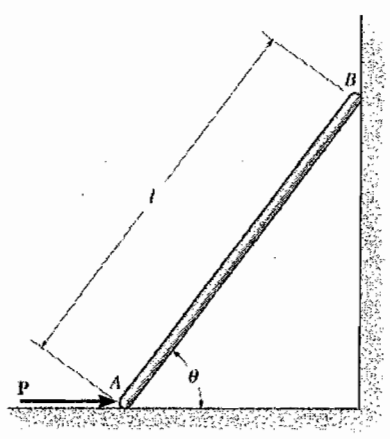

Figure 3

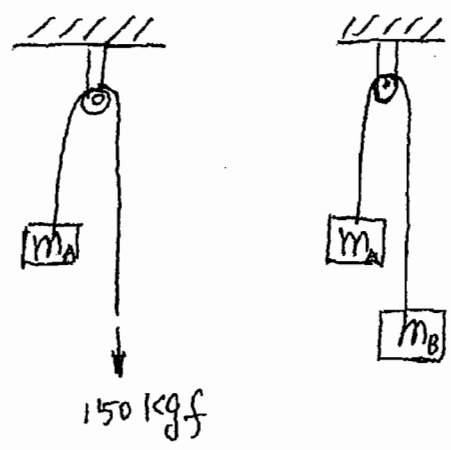

Figure 4

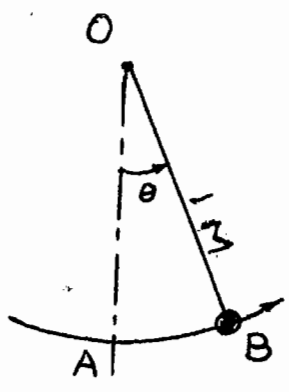

Figure 5